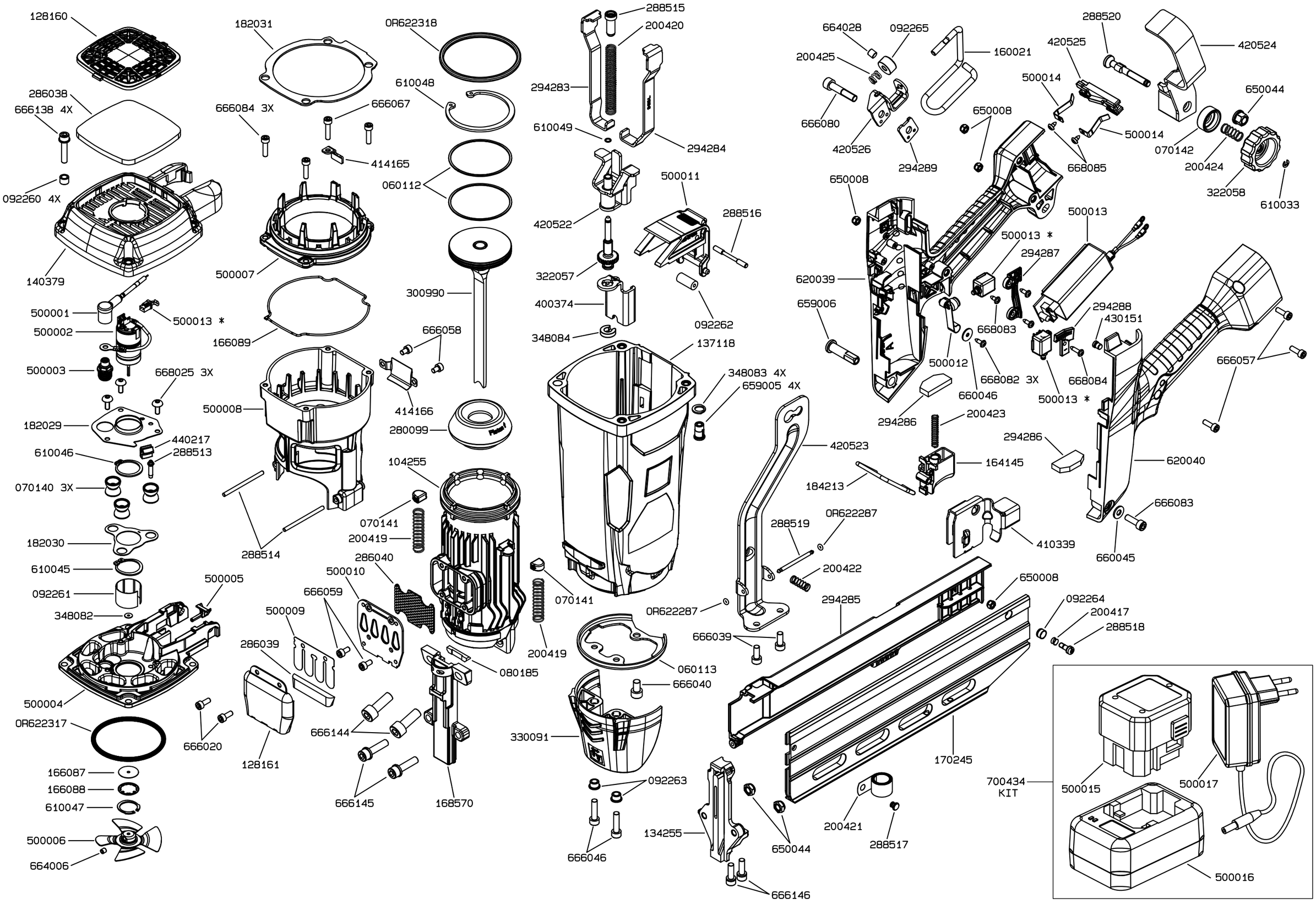REV	MACHINE CODE	MACHINE CODE	MACHINE CODE
0	11615		
DESC.	F70G FENCE 40-315