Blankett: 053-2017543

Rapid	SPARE PARTS LIST				
Reg. By	Appr. By	Appr. Date	Page	Class	No.	Rev.
KELE	PETO	1998-AUG-20	8 (14)	053	197798	4
Info		Product name				
		RAPID 105-106				
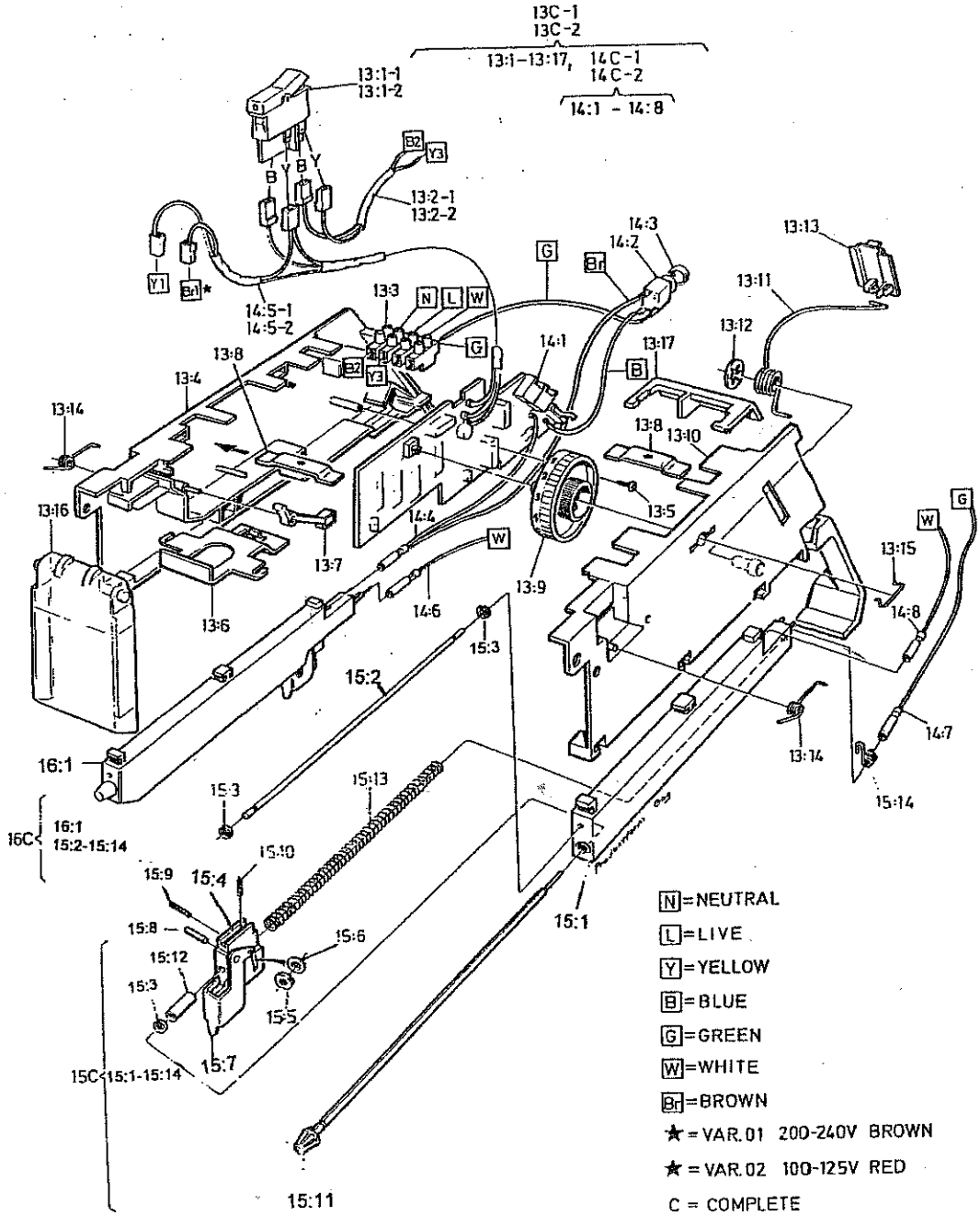
Parts are non-returnable